Daiwa
COMMITTED TO TOTAL QUALITY

SPINNING REEL

Please order by parts number, not key number

TD TIERRA 3500/4000

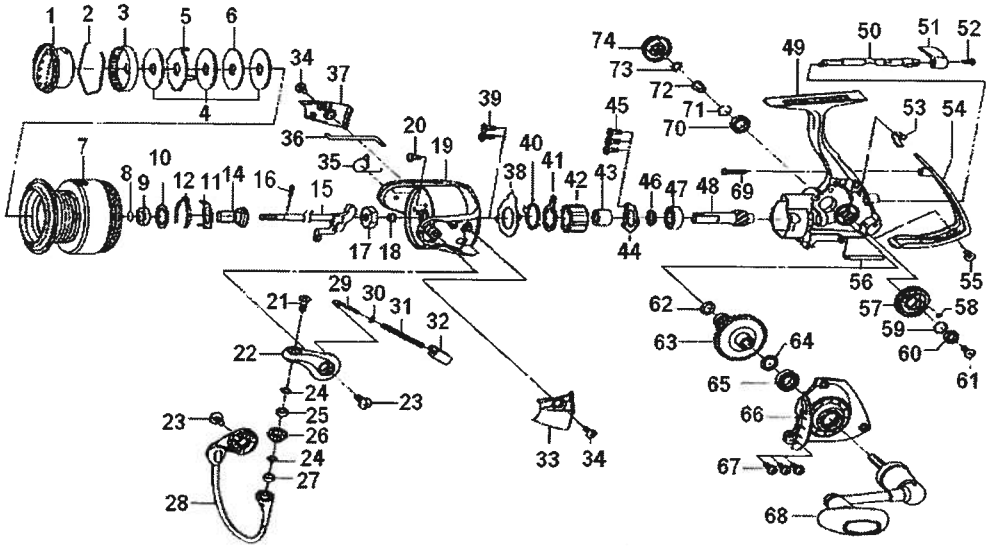

Key No.	Parts No.	Parts Name
1	G85-0801	DRAG KNOB
2	F71-0001	DRAG WASHER RET
3	F89-5302	DRAG KNOB CLICK PLT
4	F62-7101	DRAG WASHER
5	F62-7301	EARED WASHER
6	F64-4701	KEY WASHER
2-7	G84-9501	SPOOL
8	G52-5101	SPOOL RET
9	G74-7401	SPOOL COLLAR
10	F64-3500	SPOOL WASHER
11	G69-4001	CLICK LEAF SPRING HOLDER
12	F70-9002	SPOOL CLICK LEAF SPRING
14	G64-2301	SPOOL METAL
15	G84-9201	MAIN SHAFT
16	F64-3601	PIN
17	G74-3801	ROTOR NUT
18	G75-1201	ROTOR NUT COLLAR
19	G64-6109	ROTOR
20	G62-7701	ROTOR NUT LOCK SCREW
21	G19-5602	LINE ROLLER SCREW
22	G61-2312	BAIL ARM
23	G20-5001	BAIL ARM SCREW
24	F89-7101	LINE ROLLER WASHER
25	G28-1601	BALL BEARING A
26	F92-1601	LINE ROLLER
27	G04-7601	LINE ROLLER COLLAR
28	G64-6401	BAIL
29	G29-8201	BAIL SPRING SHAFT
30	E31-3901	BAIL SPRING WASHER
31	G64-6201	BAIL SPRING
32	G61-2103	BAIL SPRING HOLDER
33	G64-6301	BAIL SPRING COVER
34	G27-0801	BAIL SPRING COVER SCREW
35	G61-3101	BAIL TRIP LEVER SPRING
36	G64-6501	BAIL TRIP LEVER
37	G64-6601	BAIL TRIP LEVER COVER
38	G57-7401	BEARING RET A
39	G55-7101	BEARING RET A SCREW
40	F64-1501	ROLLER CLUTCH RET
41	G64-1401	CLUTCH CAM
42	G31-4501	ROLLER CLUTCH
43	G74-3001	SPACING SLEEVE
44	G52-2901	BEARING RET B
45	E13-4509	BEARING RET B SCREW
46	375-8509	BEARING RET WASHER
47	G52-2801	BALL BEARING B
48	G74-3101	PINION GEAR
49	G84-8801	BODY
50	G74-2601	A/R CAM
51	G69-9406	A/R LEVER
52	G69-9501	A/R LEVER SCREW
53	G72-6201	A/R CAM SPRING
54	G74-3501	REAR COVER
55	G33-2702	REAR COVER SCREW A
56	G64-4702	STABILIZER BAR
57	G64-4302	OSC GEAR
58	B85-3101	O RING A
59	G52-2100	OSC GEAR WASHER
60	G46-7102	BALL BEARING C
61	B70-3401	OSC GEAR SCREW
62	G67-0501	O RING B
63	G74-3201	DRIVE GEAR
64	373-7808	DRIVE GEAR WASHER
65	G52-3401	BALL BEARING D
66	G84-9101	SIDE COVER
67	G33-2902	SIDE COVER SCREW
68	G84-9301	HANDLE
69	E11-9602	REAR COVER SCREW B
70	B86-1704	BALL BEARING E
71	G52-5101	BALL BEARING RET
72	F72-1202	HANDLE COLLAR
73	160-8101	LOCK WASHER
74	G74-4201	HANDLE SCREW

TDTR4000 Special Parts

Key No.	Parts No.	Parts Name
2-7	G84-9801	SPOOL