PROCYON LT 1000D-XH/2000D-XH/2500D-CXH/2500D-XH/3000D-CXH/4000D-CXH

*Please order by parts number, not key number.

SPINNING REEL

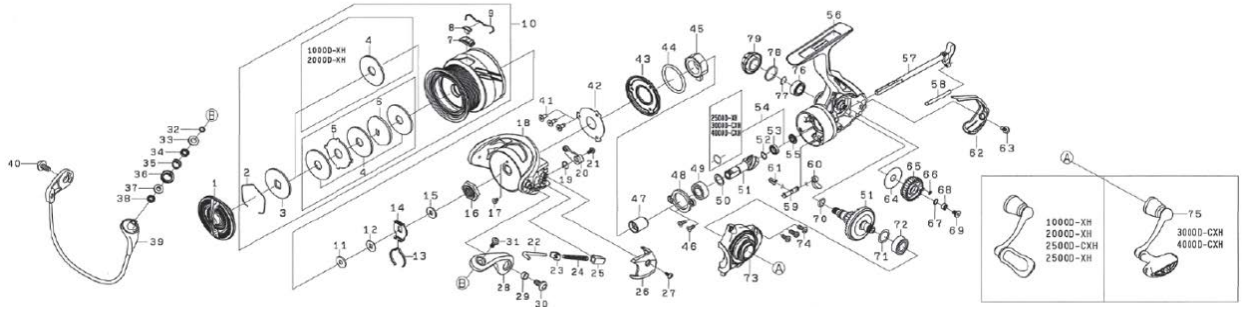

Key No	Description	1000D-XH Part No	2000D-XH Part No	2500D-CXH Part No	2500D-XH Part No	3000D-CXH Part No	4000D-CXH Part No
1	DRAG KNOB	J81-2101	J81-2101	J81-3701	J81-3701	J81-3701	J81-5501
2	DRAG RING	J54-7101	J54-7101	J54-7101	J54-7101	J54-7101	J54-7101
3	DRAG DISC WASHER	J54-7001	J54-7001	J54-7001	J54-7001	J54-7001	J54-7001
4	ATD DRAG WASHER(1pac-1pcs)	J67-8901	J67-8901	J67-8801	J67-8801	J67-8801	J67-8801
5	DRAG LIP WASHER	N/A	N/A	J54-6902	J54-6902	J54-6902	J54-6902
6	DRAG DISC WASHER	N/A	N/A	J54-7001	J54-7001	J54-7001	J54-7001
7	LINE STOPPER PLATE	J56-3601	J56-3601	J55-8101	J55-8101	J55-8101	J56-8601
8	LINE STOPPER	J55-8001	J55-8001	J55-8001	J55-8001	J55-8001	J55-8001
9	LINE STOPPER SPRING	J31-4801	J31-4801	J31-4801	J31-4801	J31-4801	J31-4801
2-10	SPOOL ASSY	J83-6801	J83-6901	J83-7001	J83-7101	J83-7201	J83-7301
11	SPOOL WASHER(A)	E39-8003	E39-8003	E39-8003	E39-8003	E39-8003	E39-8003
12	SPOOL WASHER(B)	E46-7101	E46-7101	E46-7101	E46-7101	E46-7101	E46-7101
13	CLICK LEAF SPRING	H41-6101	H41-6101	H41-6101	H41-6101	H41-6101	H41-6101
14	CLICK HOLDER	M02-1401	M02-1401	M02-1401	M02-1401	M02-1401	M02-1401
15	CLICK HOLDER WASHER	J70-3101	J70-3101	J70-3101	J70-3101	J70-3101	J70-3101
16	ROTOR NUT	J00-1901	J00-1901	J00-1901	J00-1901	J00-1901	J00-1901
17	ROTOR NUT SCREW	H02-2701	H02-2701	H02-2701	H02-2701	H02-2701	H02-2701
18	ROTOR	H97-4329	H97-4329	J54-5306	J54-5306	H96-0052	J56-7510
19	KICK LEVER SPRING	H44-3301	H44-3301	H41-3601	H41-3601	H41-3601	H41-3601
20	KICK LEVER	H44-3401	H44-3401	J54-5401	J54-5401	J03-8501	J56-7601
21	KICK LEVER SCREW	H41-7701	H41-7701	H41-7701	H41-7701	H41-7701	H41-7701
22	ARM LEVER SHAFT	H44-3601	H44-3601	J54-5601	J54-5601	H41-4101	H57-2001
23	ARM LEVER SHAFT PLATE	H57-6101	H57-6101	H57-6101	H57-6101	H57-6101	H57-6101
24	ARM LEVER SHAFT SPRING	H44-2401	H44-2401	J64-2801	J64-2801	H54-5701	H41-4201
25	ARM LEVER SHAFT HOLDER	H41-4301	H41-4301	H41-4301	H41-4301	H41-4301	J08-9401
26	ARM LEVER SPRING COVER	H97-4401	H97-4401	J54-5701	J54-5701	H96-0201	J56-7801
27	ARM LEVER SPRING COVER SCREW	H43-1301	H43-1301	H43-1301	H43-1301	H43-1301	H43-1301
28	ARM LEVER	H96-0128	H96-0128	H96-0128	H96-0128	H96-0128	H96-0128
29	ARM LEVER COLLAR	H96-2401	H96-2401	H96-2401	H96-2401	H96-2401	H96-2401
30	ARM LEVER SCREW	H43-1201	H43-1201	H43-1201	H43-1201	H43-1201	H43-1201
31	ROLLAR SCREW	H69-7701	H69-7701	H69-7701	H69-7701	H69-7701	H69-7701
32	ROLLAR COLLAR(A)	H96-1001	H96-1001	H96-1001	H96-1001	H96-1001	H96-1001
33	ROLLAR BEARING PACKING	H03-8301	H03-8301	H03-8301	H03-8301	H03-8301	H03-8301
34	ROLLARE BALL BEARING	G68-6903	G68-6903	G68-6903	G68-6903	G68-6903	G68-6903
35	ROLLARE BEARING COLLARE	H96-0901	H96-0901	H96-0901	H96-0901	H96-0901	H96-0901
36	LINE ROLLAR	G68-6702	G68-6702	G68-6702	G68-6702	G68-6702	G68-6702
37	ROLLAR COLLAR(B)	H96-0801	H96-0801	H96-0801	H96-0801	H96-0801	H96-0801
38	ROLLAR COLLAR(C)	H96-0701	H96-0701	H96-0701	H96-0701	H96-0701	H96-0701
39	BAIL ASSY	H97-4501	H97-4501	J64-2001	J64-2001	H96-0301	J64-7201
40	BAIL HOLDER SCREW	H43-1201	H43-1201	H43-1201	H43-1201	H43-1201	H43-1201
41	SEALED PLATE SCREW	J42-9301	J42-9301	J42-9301	J42-9301	J42-9301	J42-9301
42	SEALED PLATE	J67-5301	J67-5301	J67-5301	J67-5301	J67-5301	J67-5301
43	SEALED CAP	J44-5901	J44-5901	J44-5901	J44-5901	J38-8501	J40-6701
44	ONEWAY CLUTCH WASHER	J63-9901	J63-9901	J63-9901	J63-9901	J63-9901	J63-9901
45	ONEWAY CLUTCH	J38-8401	J38-8401	J38-8401	J38-8401	J38-8401	J38-8401
46	PINION BEARING PLATE SCREW	G99-7301	G99-7301	G99-7301	G99-7301	G99-7301	G99-7301
47	CLUTCH RING	J53-6102	J53-6102	J53-6102	J00-1403	J00-1403	J00-1403
48	PINION BEARING PLATE	H44-2202	H44-2202	H44-2202	H44-2201	H44-2201	H41-1501
49	PINION BALL BEARING (A)	G46-7302	G46-7302	G46-7302	G46-7302	G46-7302	G53-5104
50	PINION BEARING WASHER (A)	375-8502	375-8502	375-8502	375-8502	375-8502	375-8502
51	PINION + DRIVE GEAR SET	Z02-3848	Z02-3848	Z02-3848	Z02-3856	Z02-3856	Z02-3907
52	PINION BEARING SPRING WASHER	J68-3001	J68-3001	J68-3001	J68-3001	J68-3001	J68-3001
53	PINION BALL BEARING (B)	H95-9601	H95-9601	H95-9601	H95-9601	H95-9601	G46-6202
54	PINION BEARING SPRING WASHER (B)	N/A	N/A	N/A	G46-6103	G46-6103	G46-6103
55	PINION COLLAR	J38-7701	J38-7701	J38-7701	J38-7701	J38-7701	J38-7701
56	BODY ASSY	J81-1301	J81-1301	J81-2401	J81-3201	J81-5301	J81-5601
57	MAIN SHAFT	J55-9702	J55-9702	J81-2501	J54-4804	J55-8902	J56-6903
58	OSCILLATING POST	J08-4808	J08-4808	J08-4808	J08-4805	J08-4805	J08-4804
59	STOPPER CAM	H59-5501	H59-5501	H59-5501	H59-5501	H59-5501	H59-5501
60	STOPPER LEVER	H59-5401	H59-5401	H59-5401	H59-5401	H59-5401	H59-5401
61	STOPPER CAM LEAF SPRING	H69-7801	H69-7801	H69-7801	H69-7801	H69-7801	H69-7801
62	REAR CAP	J52-4901	J52-4901	J52-4901	J38-8901	J38-8901	J40-6801
63	REAR CAP SCREW	J38-9001	J38-9001	J38-9001	J38-9001	J38-9001	J38-9001
64	OSCILLATING GEAR WASHER	H60-7902	H60-7902	H60-7902	J64-4701	J64-4701	J64-4701
65	OSCILLATING GEAR	J53-5801	J53-5801	J53-5801	J54-4601	J55-8801	J56-6701
66	OSCILLATING GEAR O-RING	G68-3301	G68-3301	G68-3301	H77-0601	H77-0601	G46-6001
67	OSCILLATING GEAR BALL BEARING WASHER	H12-9201	H12-9201	H12-9201	H12-9201	H12-9201	H12-9201
68	OSCILLATING GEAR BALL BEARING	G46-9005	G46-9005	G46-9005	G46-9005	G46-9005	G46-9005
69	OSCILLATING GEAR BALL BEARING SCREW	G99-7001	G99-7001	G99-7001	G99-7001	G99-7001	G99-7001
70	DRIVE GEAR O-RING	G67-0501	G67-0501	G67-0501	G67-0501	G67-0501	G67-0501
71	DRIVE WASHER	375-8502	375-8502	375-8502	375-8502	375-8502	375-8502
72	DRIVE BALL BEARING (A)	G46-7302	G46-7302	G46-7302	G46-7302	G46-7302	G46-7302
73	BODY COVER ASSY	J81-1501	J81-1501	J81-1501	J81-3401	J81-3401	J81-5801
74	BODY COVER SCREW	J38-9801	J38-9801	J38-9801	J38-9801	J38-9801	J38-9801
75	HANDLE ASSY	J81-1701	J81-1701	J81-2801	J81-3501	J81-5401	J81-5901
76	DRIVE BALL BEARING (B)	G52-2706	G52-2706	G52-2706	G52-2706	G52-2706	G52-2706
77	DRIVE BEARING RING	G47-2401	G47-2401	G47-2401	G47-2401	G47-2401	G47-2401
78	HANDLE CAP O-RING	G16-2401	G16-2401	G16-2401	G16-2401	G16-2401	G16-2401
79	HANDLE CAP	J38-9701	J38-9701	J38-9701	J38-9701	J38-9701	J38-9701