Please order by parts number, not key number
Veuillez indiquer le numéro de la pièce (Non "Key" No.)

DAIWA

SPINNING REEL **OPUS PLUS 4500/5000/5500BRi**

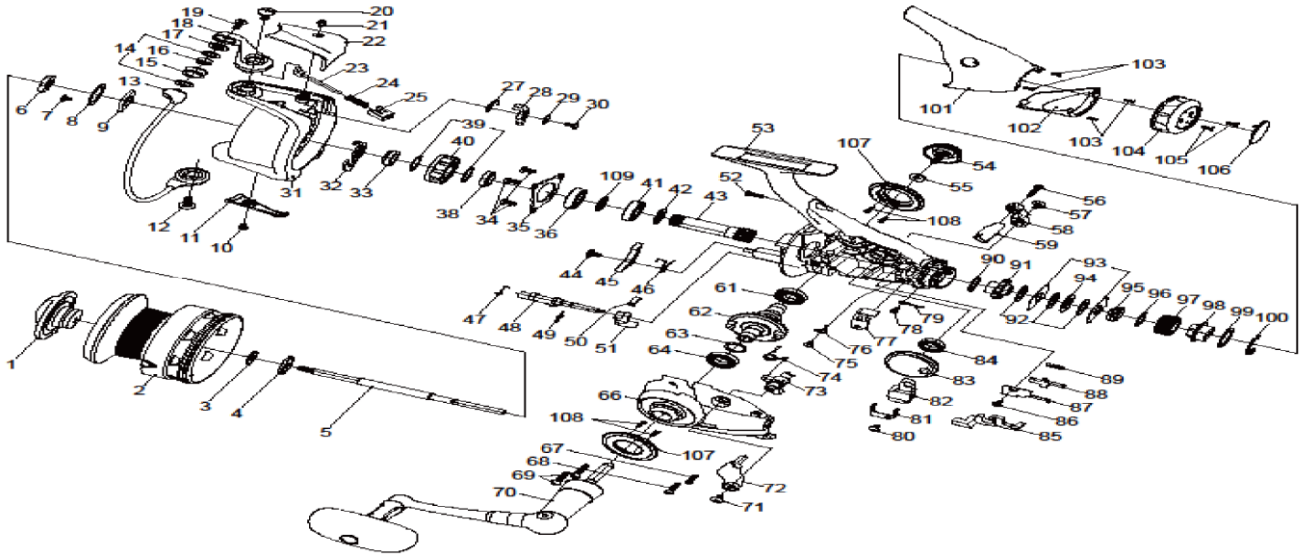

KEY NO.	PART NAME	PART NO.
1	Drag Knob Assembly	WD0-5501
2	Spool Assembly	WD0-6201
3	Washer	W36-9301
4	Washer	W36-9201
5	Main Shaft	W49-6501
6	Rotor Nut	W30-8701
7	Screw	W36-8901
8	Rotor Nut Holding Plate	W30-6501
9	Collar	W30-8201
10	Screw	W49-6601
11	Cover (A)	W49-6701
12	Screw	W36-8601
13	Bail Assembly	W58-2401
14	Washer	W45-6601
15	Line Roller	W36-8101
16	Ball Bearing	WD0-6301
17	Washer	W33-8202
18	Bail Arm	W52-3402
19	Screw	W74-2301
20	Screw	W36-8601
21	Screw	W49-6601
22	Cover (B)	W39-3402
23	Bail Spring Shaft	W39-3301
24	Bail Spring	W39-3201
25	Bail Spring Holder	W39-3101
27	Bail Trip Lever Spring	W31-1701
28	Bail Trip Lever	W39-2901
29	Washer	W46-4501
30	Screw	W39-3001
31	Rotor	WD0-5701
32	Anti-Reverse Pawl Spring (A)	W39-2601
33	Anti-Reverse Spring Holder	W74-5601
34	Screw	W39-0301
35	Bearing Retainer	W74-5701
36	Ball Bearing	W42-9301
38	Collar	W74-8301
39	Washer	W34-1501
40	Roller Clutch	W49-7601
41	Ball bearing	W42-9301
42	Collar	W39-1801
43	Pinion Gear	W74-6001
44	Screw	W39-1401
45	Anti-Reverse Pawl	W39-1301
46	Anti-Reverse Pawl Spring (B)	W39-1201
47	Anti-Reverse Cam Spring	W34-1901
48	Anti-Reverse Cam	W49-7801
49	Washer	W49-0801
50	Anti-Reverse Lever Spring	W49-7901
51	Anti-Reverse Lever	WD0-5801
52	Screw	W34-3201
53	Body	W74-8401
54	Handle Screw	W39-0101
55	Collar	W30-6401
56	Screw	W49-8201
57	Screw	W74-6201
58	Clutch Lever (A)	W74-6301
59	Clutch Lever Bridge	W49-8401
61	Ball Bearing	W49-8601
62	Drive Gear	W49-8701

KEY NO.	PART NAME	PART NO.
63	Washer	W49-8801
64	Ball Bearing	W49-8601
66	Side Cover	WD0-5901
67	Screw	W34-3201
68	Screw	W34-3101
69	Screw	W36-3401
70	Handle Assembly	WD0-6401
71	Screw	W76-4201
72	Clutch Lever (B)	W74-6701
73	Clutch Cam	W74-6801
74	Clutch Cam Spring	W74-6901
75	Screw	W74-7001
76	Click leaf Spring	W49-9501
77	Oscillating Plate	W49-9601
78	Screw	W49-9701
79	Click leaf Spring	W49-2601
80	Screw	W74-7101
81	Oscillating Slider Retainer	W49-9801
82	Oscillating Slider	W49-9901
83	Oscillating Gear	W30-5401
84	Ball Bearing	W49-1801
85	Clutch Plate (A)	W74-7201
86	Screw	W74-3501
87	Clutch Plate (B)	W50-0101
88	Clutch Trip Lever	W50-0201
89	Spring	W50-0301
90	Washer	W50-0401
91	Drag Metal	W50-0501
92	Drag Washer	W50-0601
93	Eared Washer	W50-0701
94	Key Washer	W50-0801
95	Drag Coil Spring	W50-0901
96	Washer	W50-1001
97	Drag Screw	W50-1101
98	Drag Metal	W50-1201
99	Washer	W50-1301
100	Retainer	W50-1401
101	Rear Cover (A)	WD0-6101
102	Rear Cover (B)	W74-7401
103	Screw	W74-3801
104	Drag Knob	W74-7501
105	Screw	W33-6301
106	Cap	W50-1802
107	Side Ring	W74-7601
108	Screw	W74-7701
109	Washer	W74-7801
	OPUS PLUS 5000BRi (6+1) SPECIAL PARTS	
2	Spool Assembly	WD0-6202
	OPUS PLUS 5500BRi (6+1) SPECIAL PARTS	
2	Spool Assembly	WD0-6203