Please order by parts number, not key number
Veuillez indiquer le numéro de la pièce (Non "Key" No.)

DAIWA

SPINNING REEL

CROSSCAST X5000/X5500/X5000LD

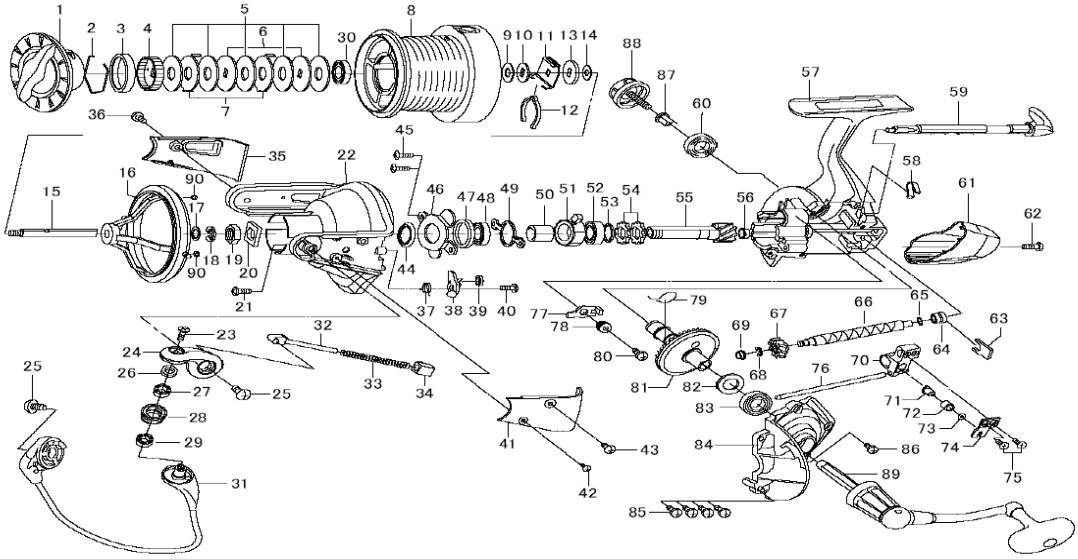

Key No.	Part No.	Parts Name
1	Q04-8301	DRAG KNOB
2	F88-4001	DRAG WASHER RETAINER
3	H49-6501	COLLAR (A)
4	G42-1401	DRAG RATCHET
5	Q06-5301	DRAG WASHER
6	F75-5701	KEY WASHER
7	F88-1702	EARED WASHER
2-8	Q04-8101	SPOOL ASSEMBLY
2-8	Q04-8202	EXTRA SPOOL ASSEMBLY
9	E39-9200	WASHER (A)
10	F04-3402	WASHER (B)
11	H05-0601	CAP
12	F70-4902	SPOOL CLICK LEAF SPRIN
13	E26-7501	WASHER (C)
14	G87-8201	SPRING WASHER
15	H49-7401	MAIN SHAFT
16	Q03-8802	LINE GUARD
17	G40-8301	WASHER (D)
18	320-1611	RETAINER
19	H49-5901	ROTOR NUT
20	G39-2201	PLATE
21	G17-1402	SCREW (A)
22	Q03-7602	ROTOR
23	E45-4007	SCREW (B)
24	Q03-8204	BAIL ARM
25	G45-5601	SCREW (C)
26	H04-9901	COLLAR (B)
27	H19-4701	COLLAR (C)
28	G74-0402	LINE ROLLER
29	H19-4701	COLLAR (D)
30	G46-7102	BALL BEARING (A)
31	Q04-7701	BAIL ASSEMBLY
32	Q03-8101	BAIL SPRING SHAFT
33	Q05-8901	BAIL SPRING
34	Q03-8001	BAIL SPRING HOLDER
35	Q044102	COVER (B)
36	G20-5101	SCREW (D)
37	Q04-8801	BAIL TRIP LEVER SPRING
38	Q03-7701	BAIL TRIP LEVER
39	G19-4301	BRAKE SHOE
40	G19-3701	SCREW (E)
41	Q04-4002	COVER (A)
42	G45-5701	SCREW (F)
43	G20-5101	SCREW (G)
44	H44-6101	PACKING
45	L00-1801	SCREW (H)
46	H35-5501	BEARING RETAINER
47	Q05-9101	COLLAR (E)
48	B54-6003	BALL BEARING (B)
49	H35-5301	CLUTCH CAM RETAINER
50	H35-5201	SPACING SLEEVE
51	G84-5601	ROLLER CLUTCH
52	B54-6003	BALL BEARING (C)
53	Q05-9201	
54	G17-6702	RATCHET
55	Q03-7101	PINION GEAR
56	G40-0401	COLLAR (G)
57	Q04-7501	BODY
58	Q05-9001	ANTI-REVERSE CAM SPRING
59	Q03-6704	ANTI-REVERSE CAM LEVER
60	G15-6801	BALL BEARING (D)
61	Q03-7502	REAR COVER
62	G27-0801	SCREW (I)
63	H35-5001	WORM SHAFT RETAINER (A)
64	H35-4801	COLLAR (H)
65	B41-1700	WASHER (E)
66	H35-9901	WORM SHAFT
67	Q03-7001	WORM SHAFT GEAR
68	320-5901	WORM SHAFT RETAINER (B)
69	H35-4701	COLLAR (I)
70	H35-5601	OSCILLATING SLIDER
71	H35-5701	OSCILLATING PAWL
72	H35-5801	COLLAR (J)
73	375-0800	WASHER (F)
74	H35-6001	OSCILLATING SLIDER COVER
75	352-1505	SCREW (J)
76	H35-4901	STABILIZER BAR
77	H35-4301	ANTI-REVERSE PAWL
78	H35-4401	COLLAR (K)
79	H35-6201	ANTI-REVERSE PAWL SPRING
80	B00-8601	SCREW (K)
81	Q03-7201	DRIVE GEAR
82	B27-0700	WASHER (G)
83	G42-6302	BALL BEARING (E)
84	Q04-7601	SIDE COVER
85	G41-0701	SCREW (L)
86	B00-8601	SCREW (M)
87	F40-9001	COLLAR (L)
88	H47-7501	HANDLE SCREW
89	Q04-7901	HANDLE ASSEMBLY
90	B85-3101	"O" RING

CROSSCAST X5500 Special Parts

2-8	Q04-9001	SPOOL ASSEMBLY
2-8	Q04-9102	EXTRA SPOOL ASSEMBLY

CROSSCAST X5000LD Special Parts

2-8	Q04-9201	SPOOL ASSEMBLY
2-8	Q04-9302	EXTRA SPOOL ASSEMBLY